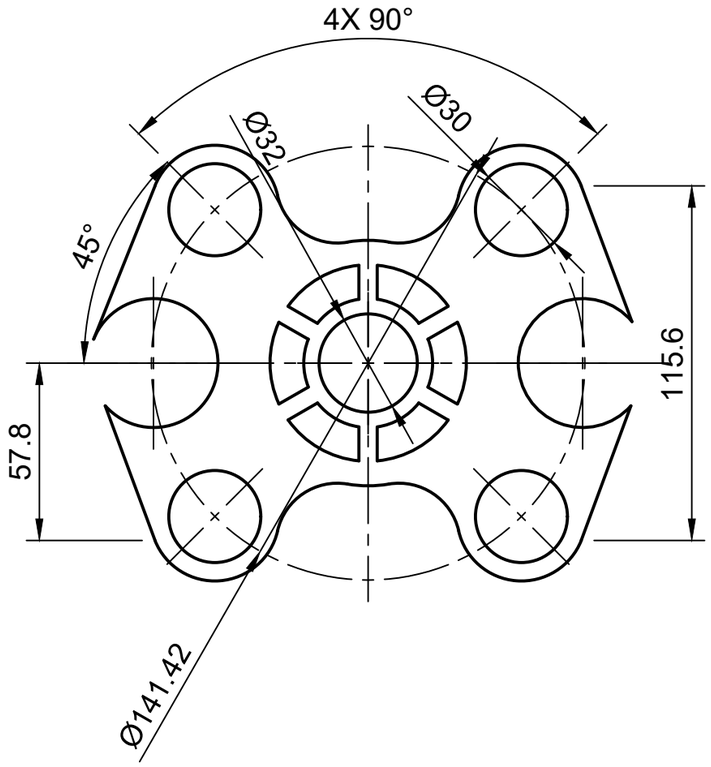

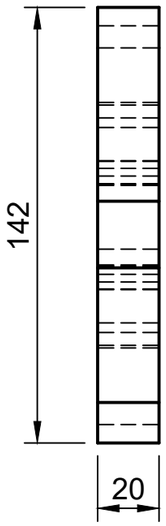

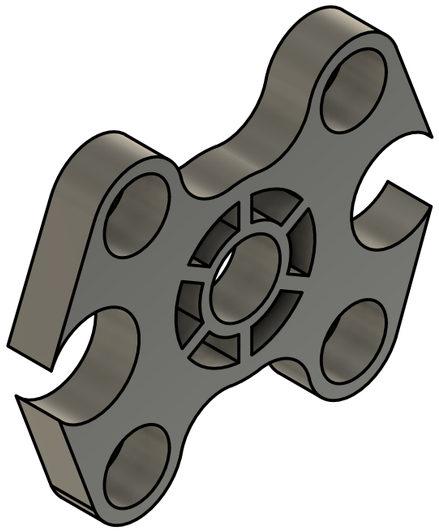

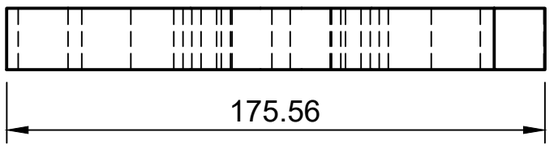

Dept.	Technical reference	Created by	Approved by
AIDS	212225230108	IYYAPPAN S 20-03-2026	
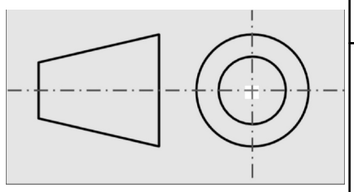		Document type	Document status: COMPLETED
		Title: DRAWING 1.2	DWG No.
			Rev. / Date of issue: 20-03-2026 / Sheet: 1/1